San Vittore del Lazio (FR)
Waste-to-Energy Plant
(Owner: ACEA SpA)

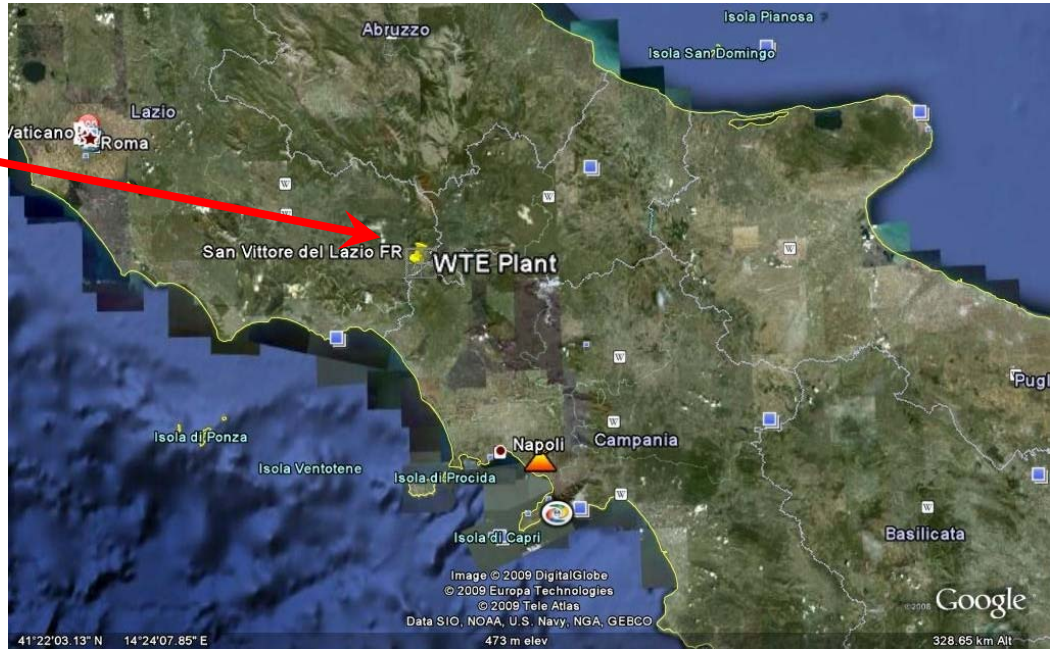

Southern Italy

Plant Capacity	
Plant start up	Year 2001
Refuse Derived Fuel (RDF)	11,5 t/h
Thermal capacity (1 boiler)	52 MW
SH steam	55 t/h (44 bar, 420 °C)
Electric power (gross)	12 MW
Electric Power (net)	10,8 MW

Performances - Year 2008	
RDF	73.000 tons
El. Energy (gross)	79 GWh

Keppel Seghers water-cooled grate

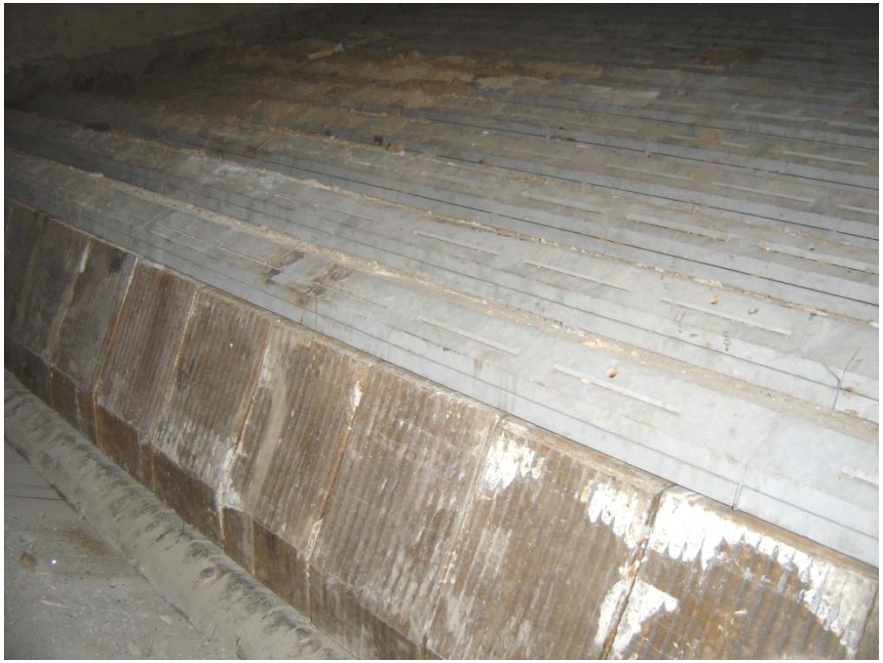

- Keppel Seghers water-cooled multi-stage grate is designed for combustion of **high calorific waste**.
- Since underfire air has no cooling function, its flow rate can be regulated **independently** to control and optimize the combustion process. This allows **low air excess** in the furnace and increases the **efficiency** of the boiler.
- The water cooling of the grate tiles protects the tiles against very high temperatures, greatly reduces the risk of thermal corrosion and increases their **lifetime**.

Source: http://www.keppelseghers.com/waste2energy

Keppel Seghers

	Assessment	Action
Plant Efficiency	Analysis of actual operating conditions of the **economizer** and study of possible modification	Adding a new tube bundle to existing economizer to increase heat recovery from flue gas.
	Analysis of actual operating conditions of the **air cooled steam condenser** and study of possible plant modification	Adding new cooling modules to the existing air cooler to increase vacuum at turbine discharge
Corrosion	Data collection along the boiler flue gas pathway (combustion chamber, radiant and convective zones), analysis of refractory lining and slag samples, measurement of tubes thickness, metallographic investigation of tubes	Definition of: - different refractory materials - different tube bundles geometry and fluid dynamics of water, steam and flue gases - Inconel *weld overlay* of tubes - water cannons to clean the surface of radiant chambers
Fouling	Analysis of the shapes of slags inside the boiler, study of RDF production process, of its final quality and relation with fouling ➔ *Correlation Matrix* containing causes/effects of the RDF plant and the WtE plant	Definition of possible plant modifications, e.g.: - recycling of cold flue gas into the combustion chamber - preheating of combustion air
Flue gas cleaning	Low efficiency of Denox SNCR (Study of complete revamping to change from SNCR to SCR system)	Improvement of Denox SNCR efficiency through repositioning of urea solution lances and recycling of cold flue gas

Mass & Energy Balance at MCR (nov. 2005)

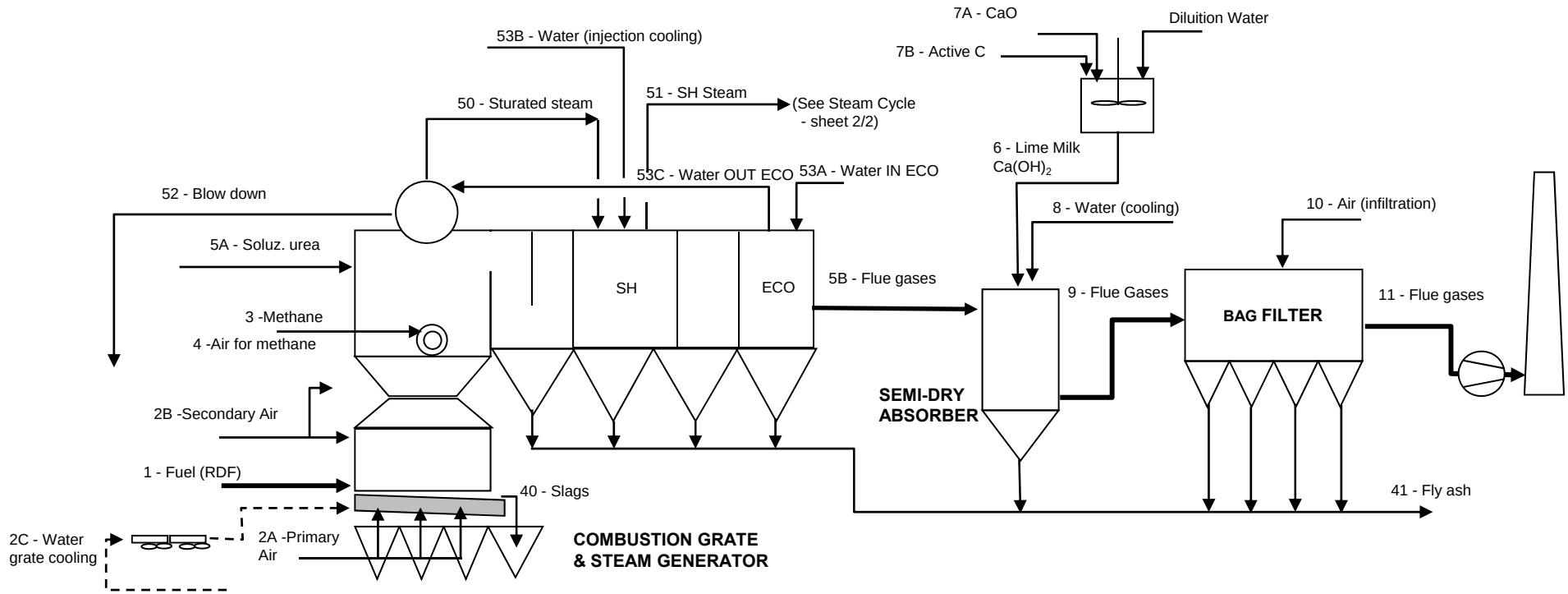

Line nr.:		1	2A	2B	2C	3	4	5A	5B	6	7A	7B	8	9	10	11	40	41
Flow rate	kg/h	11500	53970	45974	30000		294	50		2469	283	12	2638				1645	726
	Nm3/h		41837	35639		20	228		85654					91529	2000	93529		
Temperature	°C				85				250					145		142		
								40,0%		15,2%	11%							

Refuse Derived Fuel (RDF)		
Water	% w	23,00
Inerts		12,50
C		41,00
H		4,70
O		18,00
N		0,05
S		0,05
Cl		0,70
LHV	kcal/kg	3890

Linea nr.:		5B	11
Composition			
O2	%vol dry	7,76	7,98
O2	% vol	6,91	6,78
N2	"	71,76	67,45
CO2	"	10,30	9,44
H2O	"	10,96	16,33
NOx	mg/Nm3	< 200*	
SO2	"	134	
HCl	"	966	

*As NO2 rif. Dry flue gas, 11% O2

Linea nr.:		50	51	52	53A	53B	53C
Flow rate	kg/h	51367	57.850	202	51569	6483	51569
T	°C	266 (51 bar)	390 (42 bar)	266	130	130	199

Boiler Efficiency (EVA + SH + ECO)		
Heat from flue gases	36.402	Mcal/h
Haet released by RDF + methane	44.905	Mcal/h
Boiler Efficiency (rif. RDF+Methane)	**81,1**	**%**

Mass & Energy Balance at MCR (nov. 2005)

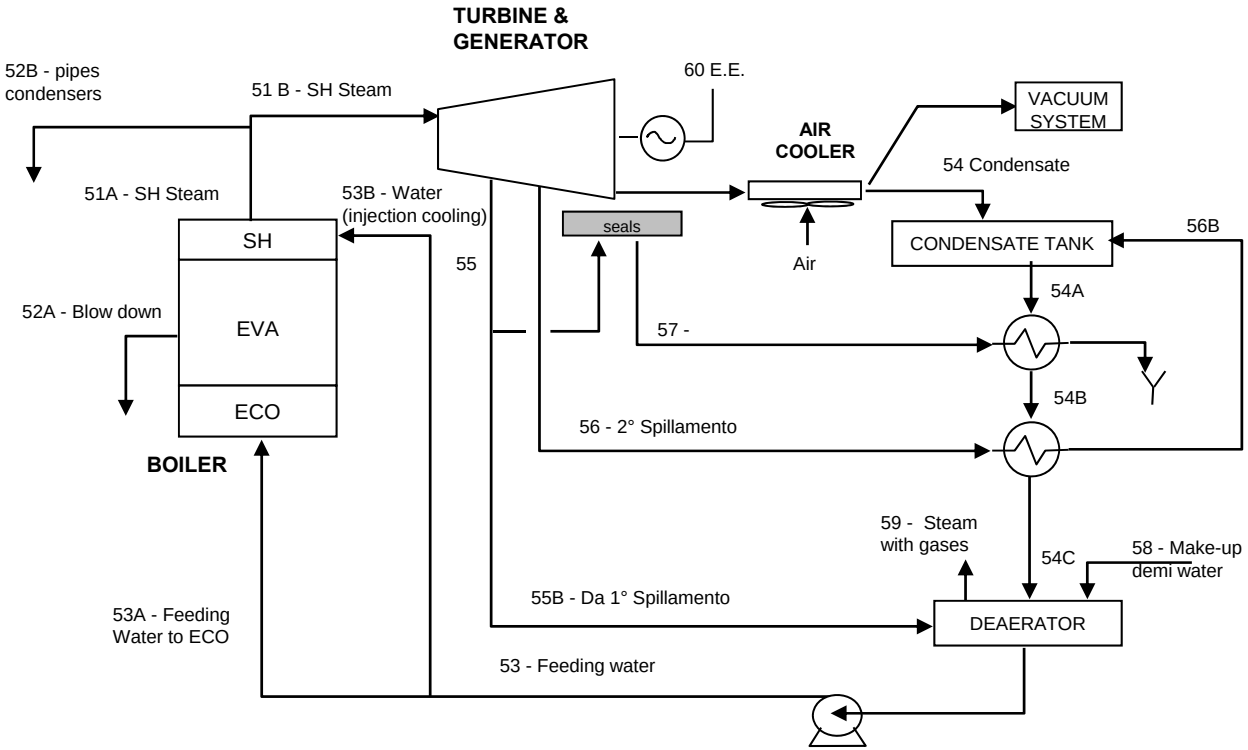

Line nr.:			51A	51B	52A	52B	53	53A	53B	54	54A	54B	54C	55	55B	56	56B	57	58	59
Flow rate	kg/h		57850	57350	202	500	58051	51569	6483	49308	51240	51240	51240	6110	5920	1932	1932	190	1192	300
Temp.	°C		390	390	266			130	130	62	63	65	85	230	230	113	85	100	25	130
Pressure	bar g		42	42						0,22 bar a				3,2		0,6		0		

Plant Efficiency		
Specific E.E. production	4,83	kg/kWh
Gross Efficiency	**22,7**	**%**

		60
Electric Power	**kW**	**11868**

Modelling of Revamping - Mass & Energy Balance at MCR (nov. 2005)

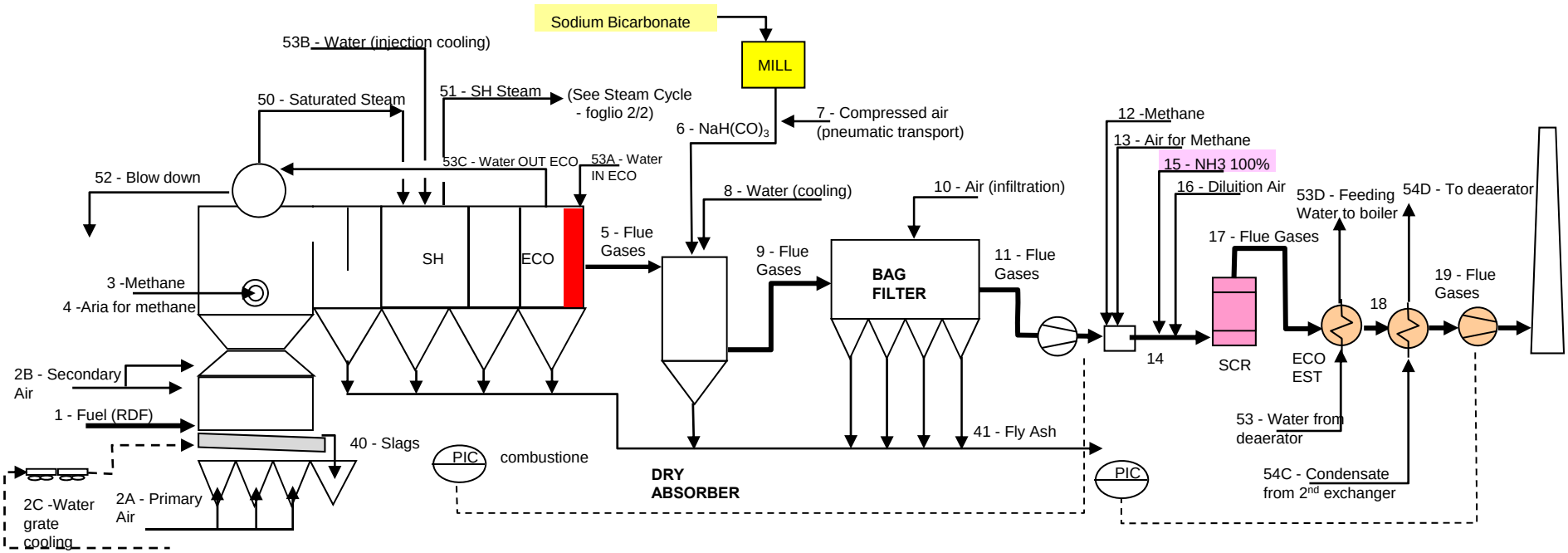

Line nr.:		1	2A	2B	2C	3	4	5	6	7	7B	8	9	10	11	12	13	14	15	16	17	18	19
Flow rate	kg/h	11500	53970	45974	30000		294		268		12	225							10,5				
	Nm3/h		41837	35639		20	228	85654		1.876		280	85935	2000	87935	start up	start up	87935	13,8	335	88270	88270	88270
Temp.	°C				85			**200**					195		191			194,1			193,5	183,5	133,5

Refuse Derived Fuel (RDF)		
Water	% w.	23,00
Inerts		12,50
C		41,00
H		4,70
O		18,00
N		0,05
S		0,05
Cl		0,70
LHV	kcal/kg	3890

Line nr.:		5	11	17
Composition				
O2	%vol dry	7,76	8,09	8,16
O2	% vol	6,91	7,21	7,26
N2	"	71,76	71,75	71,78
CO2	"	10,30	10,04	10,00
H2O	"	10,96	11,00	10,96
*NOx	mg/Nm3	443	**443**	**< 70**
*SO2	"	134	**< 5**	**< 5**
*HCl	"	966	**< 2**	**< 2**

*Rif. Dry Flue Gases, 11% O2 (Nox as NO2)

Line nr.:		40	41	50	51	52	53A	53B	53C	53D	54C	54D
Flow rate	kg/h	1645	489	54489	60559	214	54703	6070	54703	60773	53684	53684
T	°C			266 (51 bar)	390 (42 bar)	266	135	135	**227**	135	85	112,1

Boiler Efficiency (EVA + SH + ECO)		
Heat from flue gases	37.850	Mcal/h
Haet released by RDF + methane	44.905	Mcal/h
Boiler Efficiency (rif. RDF+Methane)	**84,3**	**%**

Modelling of Revamping - Mass & Energy Balance at MCR (nov. 2005)

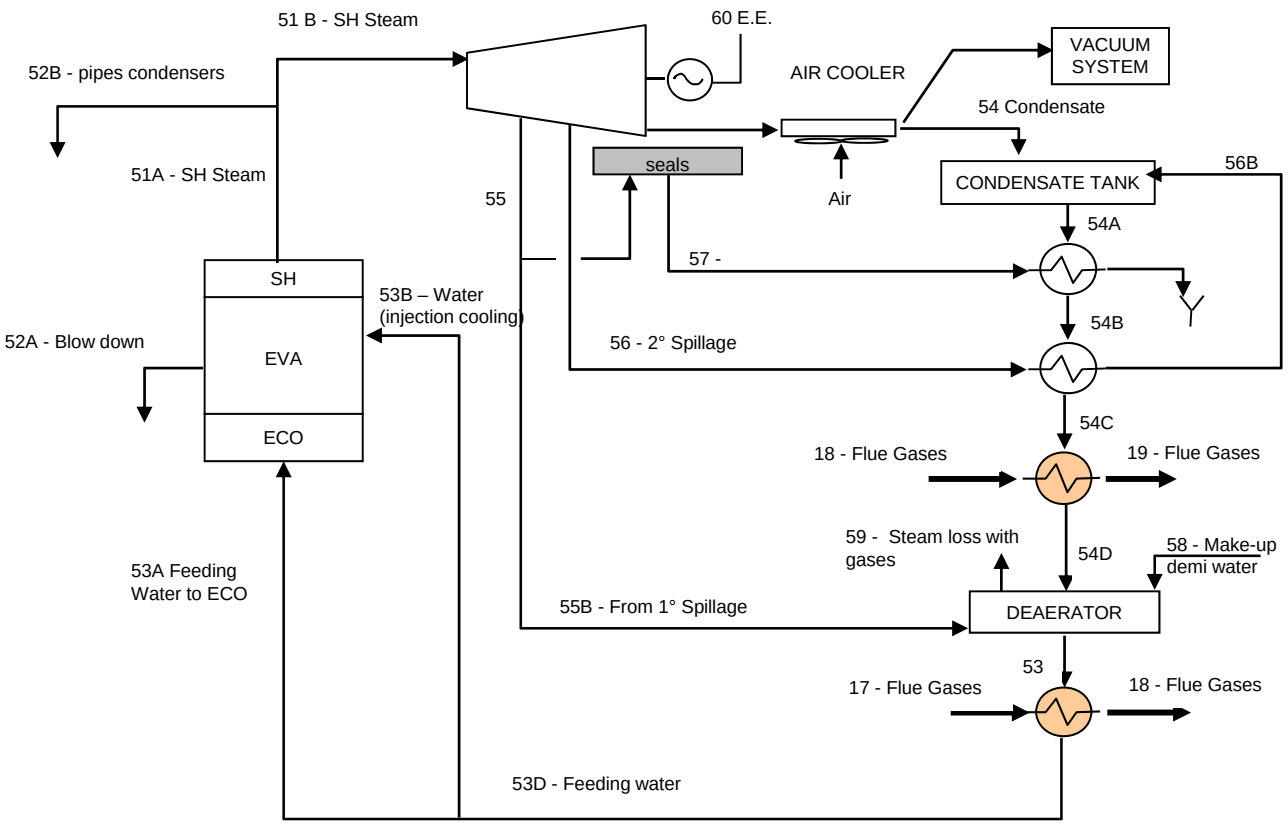

Line nr.:		51A	51B	52A	52B	53	53A	53B	53C	53D	54	54A	54B	54C	54D	55	55B	56	56B	57	58	59
Flow rate	kg/h	60559	60059	214	500	60773	54703	6070	54703	60773	51659	53684	53684	53684	53684	6375	6177	2024	2024	199	1213	300
Temp.	°C	390	390	266			135	135	227	135	62	63	65	85	112	230	230	113	85	100	25	130
Pressure	bar g	42	42								0,22 bar a					3,2		0,6		0		

Plant Efficiency		
Specific E.E.	4,83	kg/kWh
Gross Efficiency	**23,8**	**%**

		60
Electric Power	**kW**	**12432**

Economizer performances: data collection and comparison

	DESIGN		OPERATING CONDITIONS CHECKED ON SITE				
	LOAD B1 MCR	**LOAD B3 Overload (117% of MCR)**	**25 apr. 2004** (note 1)	**1 apr. 2005**	**1 jul. 2005** (note 2)	**9 , 10 aug. 2005** (note 2)	**3 oct. 2005**
STEAM OUT OF SH3							
Flow rate	55 t/h	64 t/h	59 t/h	56 t/h	60 t/h	58 t/h	58 t/h
Pressure	44 bar(g)		42,3 bar(g)	42,3 bar(g)	42,5 bar(g)	42,5 bar(g)	42,5 bar(g)
Temperature	420°C	420°C	400°C	397°C	397°C	390°C	392°C
FLUE GAS							
Flow rate at boiler outlet	134.000 kg/h ~100.000 Nm3/h	156.000 kg/h ~120.000 Nm3/h	~ 87.000 Nm3/h (calculated)	~ 83.000 Nm3/h (calculated)	~ 88.000 Nm3/h (calculated)	~ 85000 Nm3/h (calculated)	~ 85000 Nm3/h (calculated)
T at ECO2 inlet	345°C	359°C	299°C (measured) (329°C real - 4)	310°C (measured) (340°C real - 4)	321°C (measured) (351°C real - 4)	310°C (measured) (340°C real - 4)	319°C (measured) (349°C real - 4)
T at ECO1 inlet	280°C	289°C	-	-	-	-	-
T at ECO1 outlet	**230°C**	**233°C**	203°C (measured) (**235°C** real - 3)	232°C (measured) (**270°C** real - 3)	236°C (measured) (**273°C** real - 3)	227°C (measured) (**267-270°C** real -3)	240°C (measured) (**268°C** real - 3)
$\Delta T = (T_{in\ ECO2} - T_{out\ ECO1})$	**115°C**	**126°C**	**94 °C**	**70 °C**	**78 °C**	**70 °C**	**81 °C**
WATER							
Flow rate feeding water ECO	50 t/h	57 t/h	59 t/h	50 t/h	55 t/h	51,5 t/h	52 t/h
T inlet ECO1	144 °C	130°C	127°C	131 °C	130 °C	131 °C	131 °C
T inlet ECO2	178 °C	169 °C	-	-	-	-	-
T outlet ECO2	220 °C	217 °C	194 °C	196 °C	199 °C	199 °C	200 °C

NOTES:

(1) Plant shut down from 14 Apr. 04 to 24 Apr. 04 for maintenance and boiler cleaning.

(2) Plant shut down from 04 Jul. 05 to 19 Jul. 05 for maintenance and boiler cleaning.

(3) Temperature measured by thermocouples at the lime absorber inlet is higher than the one measured by thermocouples at ECO outlet because they are better exposed to flue gas flux and not influenced by cold surfaces of the boiler.

(4) True temperatures of flue gas in the ECO zone are at least 30°C higher than measured temperatures which are affected by cold walls sight.

Nr. 2 New Combustion Lines (under construction)

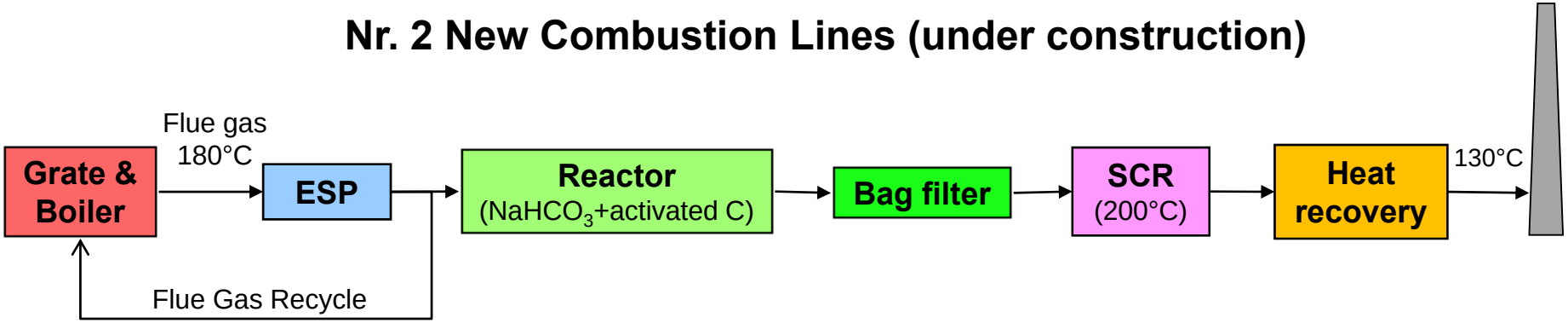

Capacity of each new line	
Plant start up	Year 2010/11
Waste (RDF)	100.000 t/year
Thermal capacity	54 MW
SH steam	65 t/h (42 bar, 410 °C)
Electric power (gross)	14,5 MW
Electric Power (net)	12,7 MW

Overall Plant Capacity (nr. 2 new lines + 1 existing)	
RDF	about 300.000 t/year
Thermal capacity	160 MW
Electric power (gross)	41 MW
Electric Power (net)	36,2 MW

Combustion chamber, rear membrane wall (Dec. 2004)

Combustion chamber, rear membrane wall (May 2005)

Combustion chamber, rear membrane wall ("nose") (July 2005)

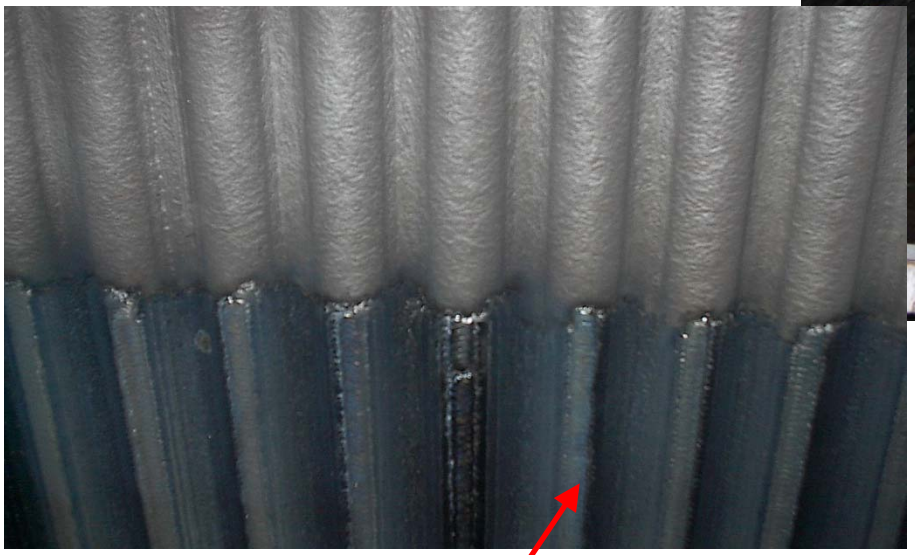

Inconel Alloy 625

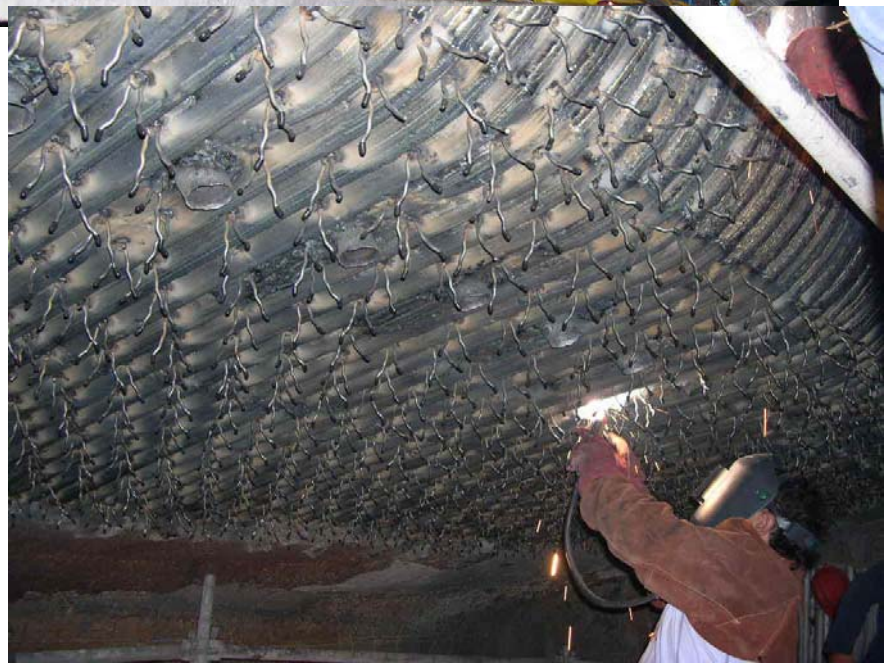

Weld Metal Overlay (WSI's *Unifuse*® Technology)

WSI Welding Services Inc.

Source: Ing. Andrea Pacchiarotti, *Welding Services Italia*

Heavy fouling of combustion chamber (January 2006)

Slags in combustion chamber (January 2006)

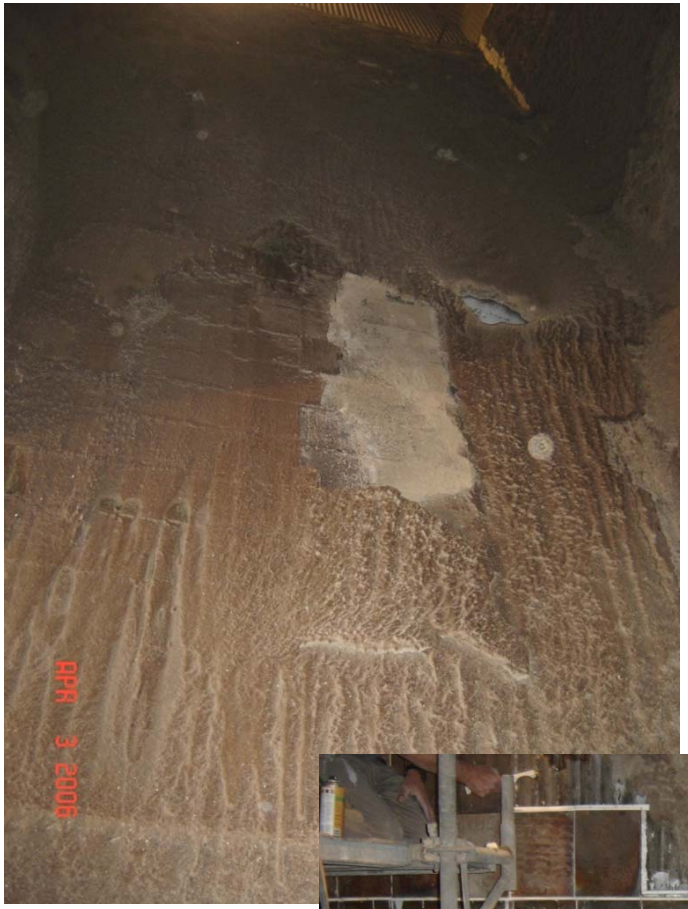

Combustion chamber (April 2006)

Refractory tiles wall